NOTES:

CONSTRUCT STANDARD SIDEWALK 5' WIDE AND 4" THICK UNLESS OTHERWISE DENOTED ON PLANS. CONCRETE SHALL HAVE A COMPRESSIVE STRENGTH OF 3500 PSI AT 28 DAYS.

SIDEWALKS THAT CROSS DRIVEWAY ENTRANCES SHALL BE 6" THICK FOR THE LENGTH OF THE DRIVEWAY CROSSING.

PLACE A GROOVE JOINT 1" DEEP WITH ⅛" RADII IN THE CONCRETE SIDEWALK AT 5' INTERVALS. ONE ½" EXPANSION JOINT WILL BE REQUIRED AT 50' INTERVALS. A ½" EXPANSION JOINT WILL BE REQUIRED WHERE THE SIDEWALK JOINS ANY RIGID STRUCTURE.

SEE STD. DWG. 400.1 & 400.2 FOR WHEELCHAIR RAMP LOCATION REQUIREMENTS AND CONSTRUCTION GUIDELINES.

NOT TO SCALE

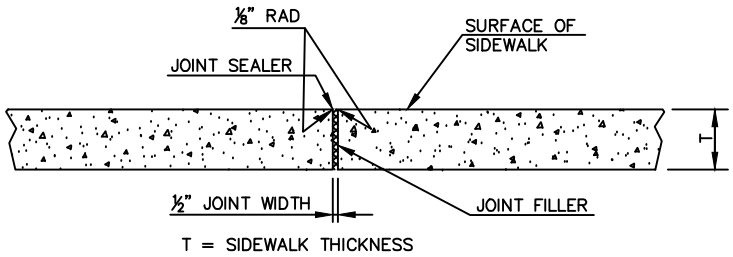

TRANVERSE EXPANSION JOINT IN SIDEWALK

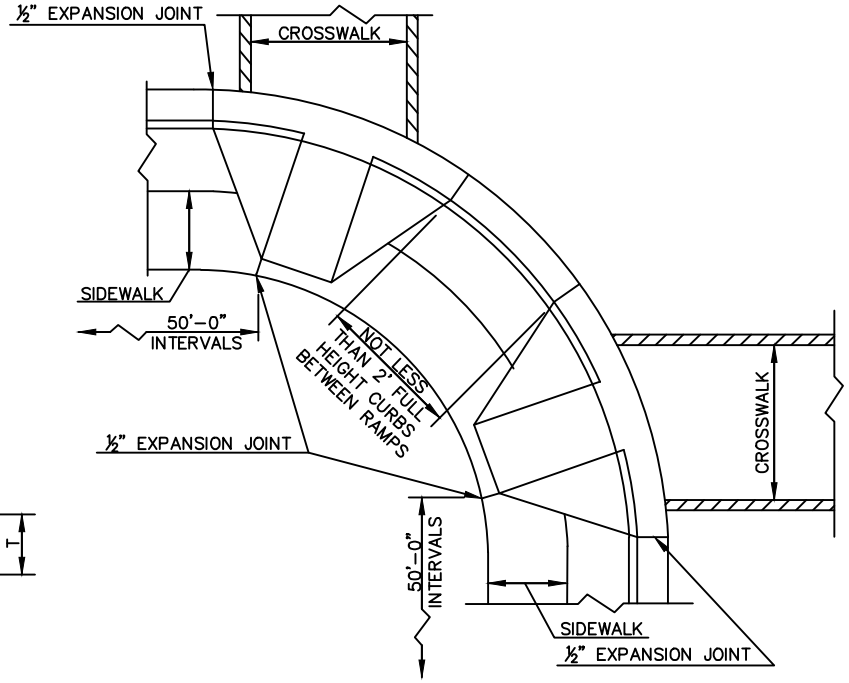

PLAN VIEW

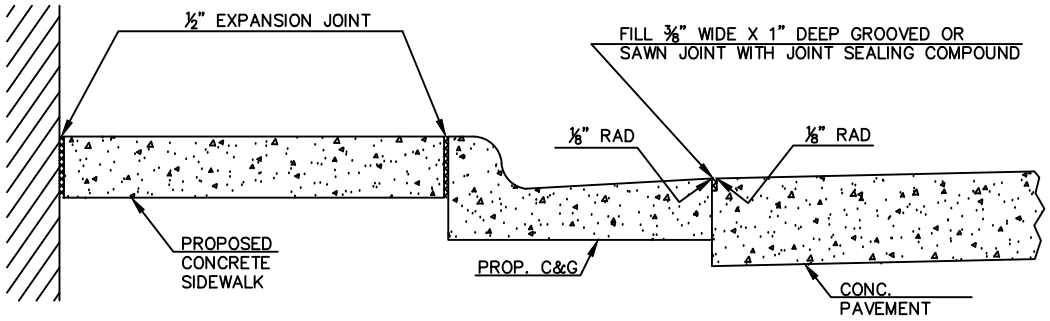

DETAILS SHOWING JOINTS IN CONCRETE SIDEWALK

CITY OF MORGANTON

CONCRETE SIDEWALK

STD. NO. 403.1

DATE 10-19-07

SHEET 1 OF 2

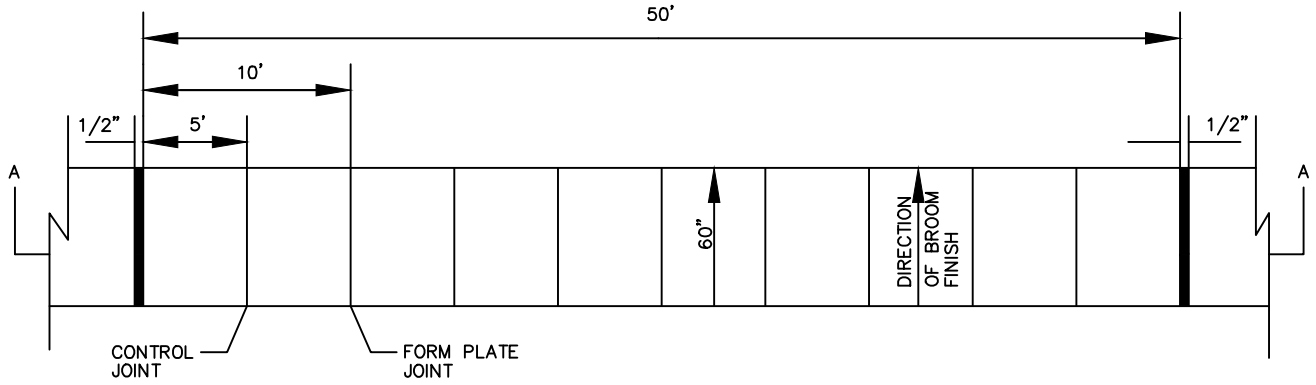

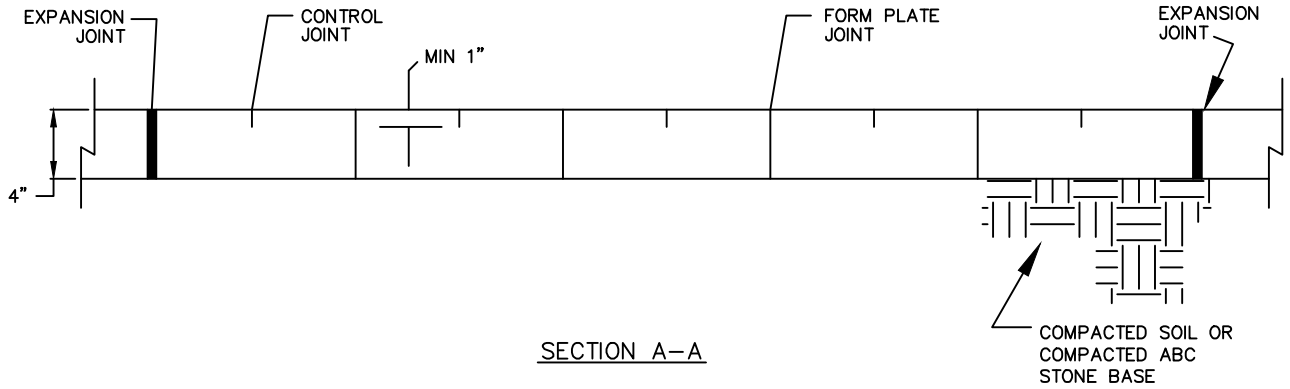

SECTION A–A

NOTE:
1. CONCRETE SHALL HAVE A COMPRESSIVE STRENGTH OF 3500 PSI AT 28 DAYS
2. SURFACE SHALL BE ROUGH NON–SKID TYPE
3. ALL SIDEWALKS SHALL HAVE CROSS–SLOPE OF 1/4" PER FOOT TO DRAIN TOWARD STREET.
4. SIDEWALKS AT DRIVEWAY CUTS/ENTRANCES SHALL BE MINIMUM 6" THICK CONCRETE.

NOT TO SCALE

		STD. NO.	DATE
	CONCRETE SIDEWALK	403.2	10–19–07
			SHEET 2 OF 2
	CITY OF MORGANTON		